PROPRIETARY, CONFIDENTIAL and/or TRADE SECRET MATERIAL -- NOT OPEN TO PUBLIC DO NOT SCAN, COPY OR DISTRIBUTE WITHOUT WRITTEN AUTHORIZATION FROM ARTESYN EMBEDDED TECHNOLOGIES, INC.
©2017 ARTESYN EMBEDDED TECHNOLOGIES, INC. ALL RIGHTS RESERVED
This document, and the information it contains, are the property of ARTESYN EMBEDDED TECHNOLOGIES, INC. and are protected by law. Both must be held in strictest confidence at all times.
No license or right to copy, use or disclose this document, or the information it contains, is granted either expressly or by implication.

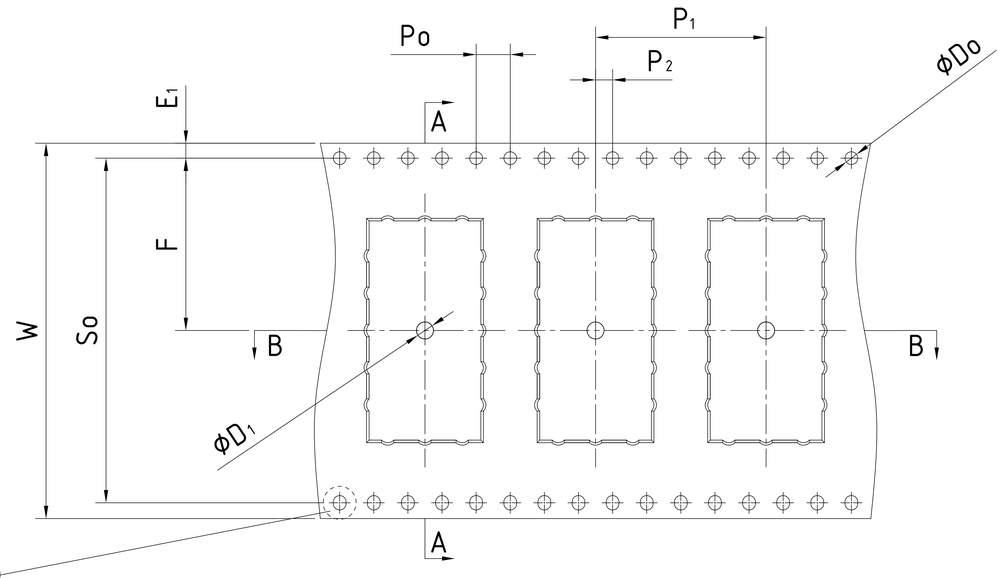

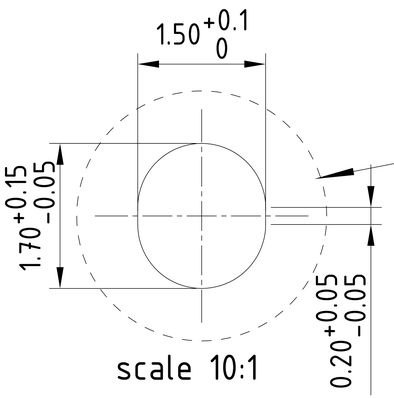

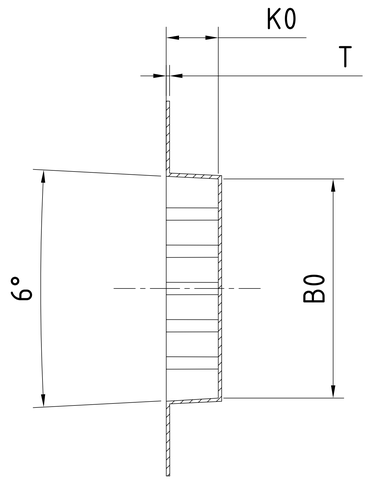

SECTION A-A

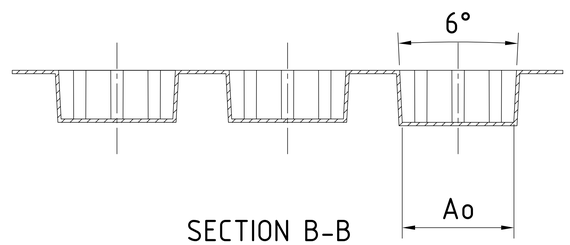

SECTION B-B

EIA DIMENSIONS	
T	0.40±0.05
W	44.00±0.30
E_1	1.75±0.10
F	20.20±0.15
So	40.40±0.10
P_1	20.00±0.10
P_0	4.00±0.10
P_2	2.00±0.15
D_0	$\phi 1.50^{+0.10}_{-0.00}$
D_1	ϕ2.00 min
Ao	13.10±0.10
Bo	25.70±0.10
Ko	6.10±0.10

NOTES:
1.MATERIAL: BLACK STATIC-DISSIPATIVE PS.
2.SURFACE RESISTANCE : >=10^4 AND < 10^11 OHMS.
3.THE STATIC VOLTAGE OF THE PART SURFACE SHOULD BE LESS THAN 100V.
4.10 SPROCKET HOLE PITCH CUMULATIVE TOLERANCE +/-0.20MM.
5.CARRIER CAMBER NOT TO EXCEED 1MM IN 100MM.
6.A0 AND B0 MEASURED ON A PLANE 0.3MM ABOVE THE BOTTOM OF THE POCKET.
7.K0 MEASURED FROM A PLANE ON THE INSIDE BOTTOM OF THE POCKET TO THETOP SURFACE OF THE CARRIER.
8.ALL DIMENSIONS MEET EIA-481-D REQUIREMENTS.
9.UNLESS OTHERWISE STATED:.X +/-0.10 ANGLES: +/-1°
10.FOR HAZARDOUS SUBSTANCES ACCEPTANCE LEVEL AND TESTING METHOD REFER TO 970-006034-0000,ITEM7.
11.COMPLY WITH 920-000120-0000 (SUPPLIER PACKAGING STANDARDS).

P/N SUFFIX	REVISION	ECO NO.	REVISION DESCRIPTION	DATE	REVISED BY	APPROVED BY
-0000	AA		FIRST RELEASE	2017-12-1	JIAHAO CHEN	Perry Liao Digitally signed by: perryliao@artesyn.com DN: CN = perryliao@artesyn.com Date: 2017.12.01 16:39:10 +08'00'

SHEET REVISION HISTORY

Drawn to: ISO STANDARDS
Tolerancing: ISO 8015
Unless Stated Otherwise — General tolerances: ISO 2768-mK; Units: LENGTH: mm, ANGLE: DEG; Scale: 1:1
Material: SEE NOTES
Treatment: SEE NOTES
Created by: JIAHAO CHEN
Approved by: PERRY LIAO
Document type: DRAWING
Dept.:
Technical reference:
Document status:
ARTESYN EMBEDDED TECHNOLOGIES
The Artesyn Embedded Technologies logo is a trademark of Artesyn Technologies, Inc.
Title, Supplementary title: LGA50D-01DADJLPJ
PKG,T&R,CXR TP
658-008088-0000
Rev.: AA
Date of issue: 2017-12-1
Lang.: EN
Sheet: 1 of 1
A3